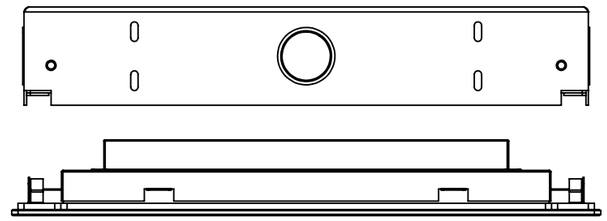

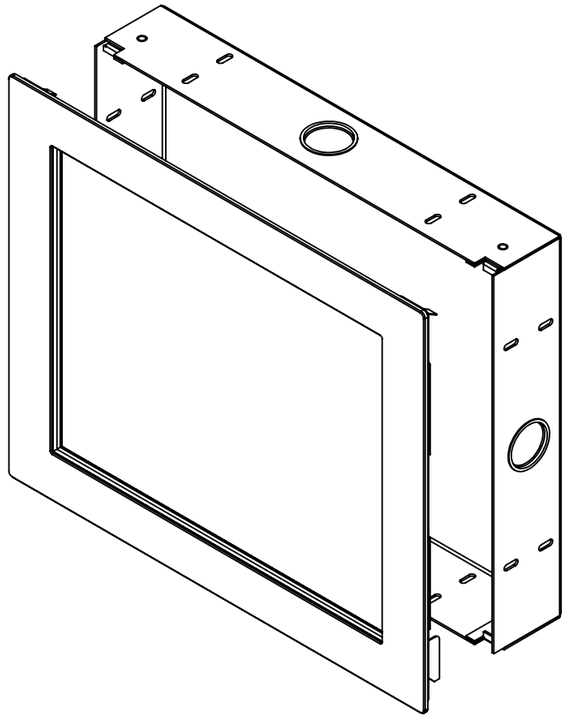

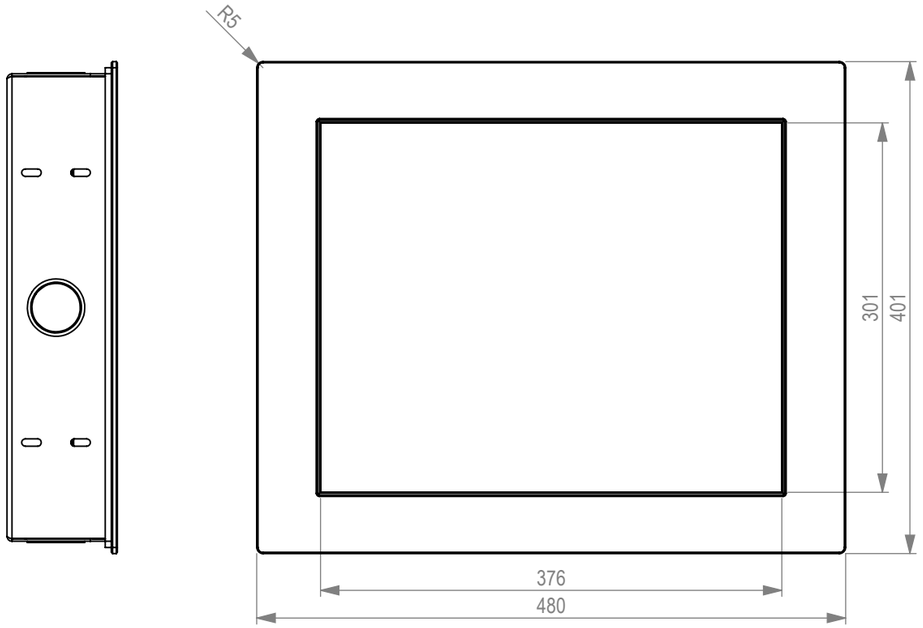

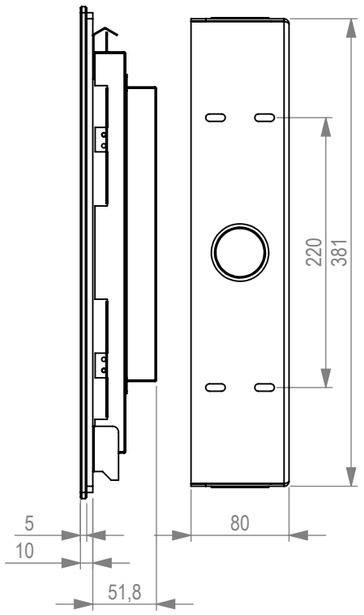

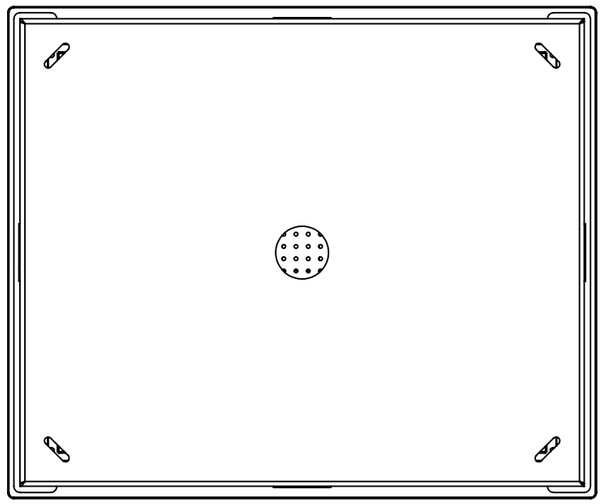

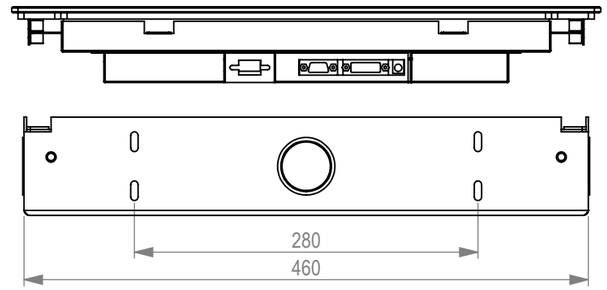

DATE 08-11-2015	DO NOT SCALE DRAWING	REVISION 0	
	TFT/Solutions		
MATERIAL: Aluminium front	TITLE: Assembly		
FINISH: Blank geanodiseerd of zwart gecoat	DWG NO. WMK-03-TFT19-IRU		A3
	SCALE:1:5	SHEET 1 OF 1	